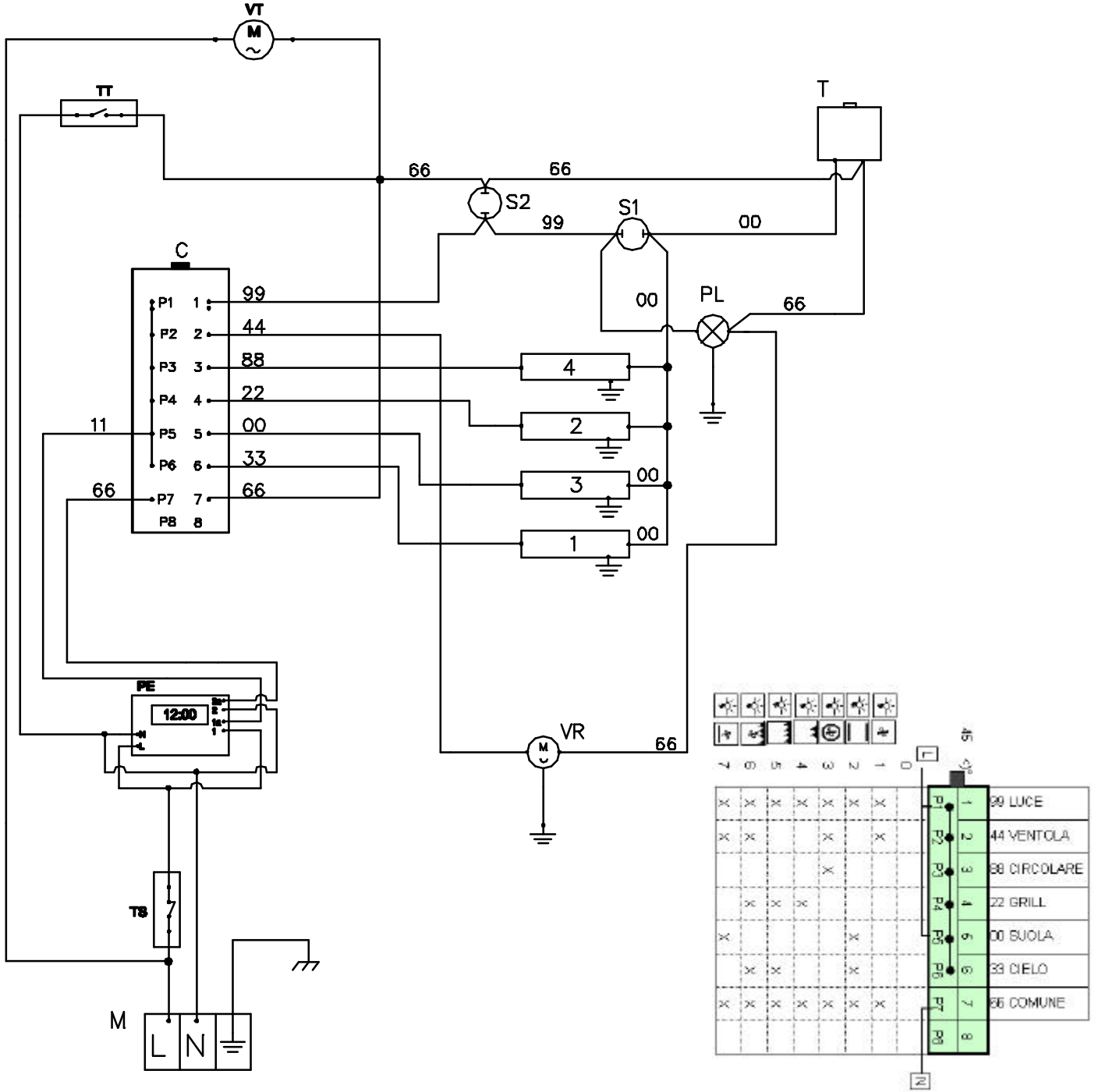

CODICE	000-603

DESCRIZIONE

2400000003 GRUPPO EL. 800CMPE CENTR.
1110000402 COMM. 7+0 42.00000.014
1110000488 LUCE SPIA GIALLA C/RES. ANTILUMINESCENZA
1110000489 LUCE SPIA VERDE C/RES. ANTILUMINESCENZA
1110000491 FASCETTA SERRACAVO BIANCA

DATA	04/12/00	DIS. DF
MODIFICHE		DIS.
VISTO	U.T.	C.Q.

A = ACCENSIONE/IGNITION/ALLUMAGE/ENCENDIDOR
BP=BLOCCO PORTA/DOOR LOCKING SYSTEM/BLOCAGE PORTE/CERRADOR PUERTA
C = COMMUTATORE/SELECTOR/COMMUTATEUR/COMUTADOR
CI = COMMUT./SELECT./COMMUT./COMUT. COAX
CA =CATALIZZATORE/CATALYST SYSTEM/CATALIZATEUR/CATALYZADOR
CMel = CONTAMINUTI ELETTRONICO / ELECTRONIC TIMER
D = DECODER TERMOSTATO/THERMOSTAT DEC./DEC. THERMOSTAT/DEC. TERMOSTATO
DI = DECODER COMMUTATORE/SELECTOR DEC./DEC. COMMUTATEUR/DEC. COMUTADOR
fc = FINE COSSA/SWITCH P = PUNTALE/TIP
FC = FINE COTTURA/END COOKING/FIN COUSSON/ TEMPORIZZATOR ELEC. (120 min.)
G = GIRARROSTO/TURNSPIT/TOURNEBROCHE/RUSTEPOLLOS
H = FILTRO ANTIDISTURBO/RADIO INTERFERENCE
IA = MICRO ACCENSIONE/IGNITION SWITCH/MICRO ALLUMAGE/MICRO ENCENDEDOR
IG = MICRO GRILL/GRILL SWITCH/MICRO GRILL/MICRO GRILL IVT=INTERRUTTORE VT/COOLING SWITCH
IP = MICRO PORTA/DOOR SWITCH/MICRO PORTE/ MICRO PUERTA
L = FASE/LIVE/PHASE/FASE
M = MORSETTIERA/TERMINAL BLOK/BORNIER/REGLETA DE CONNEXION
M1 = MORSETTO LUCE PIANO/TERMINAL BLOK HOB SIGNAL LAMP/
BORNE LAMPE PLAQUE/BLOCCO DE CONNEXION PILOTO PLACA
MP = MANOPOLA TERM./KNOB THERM./MANETTE THERM./MANECILLA TERM. P-PULL
MP1 = MANOPOLA COMMUTATORE/SELECTOR KNOB/
MANETTE COMMUTEUR/MANECILLA COMUTADOR P-PULL
N = NEUTRO/NUTER/NEUTRE/NEUTRO
OA= OROLOGIO ANALOGICO/ANALOGUE CLOCK/HORLOGE ANALOGIQUE/RELOJ ANALOGICO
PA = PROG.ANALOGICO/ANALOGUE TIMER/PROG.ANALOGIQUE/PROG.ANALOGICO
PE = PROG.ELETTRONICO/ELECTRONIC TIMER/PROG.ELECTRONIQUE/PROG.ELECTRONICO
PL = LUCE FORNO/OVEN LIGHT/LAMPE FOUR/LUZ HORNO
PM = PROG.MECCANICO/MECHANICAL TIMER/PROG. MECCANIQUE/PROG.MECCANICO
RE = REGLDI ENERGIA/ENERGY REG./REG. D'ENERGIE/REGLDE ENERGIA
SC = SCHEDA LED ICONE CIRCOLARI/LED WITH CIRCULAR ICONS
SL = SCHEDA LED LINEARE CON DISPLAY/LINEAR LED WITH DISPLAY
S1 = SPIA TERMOST./THERMOST. SIGNAL LAMP/L.TEMOIN THERMOST./PILOTO TERMOST.
S2 = SPIA/SIGNAL LAMP/LAMPE TEMOIN/PILOTO ON-OFF (VERDE/GREEN/VERT/VERDE)
S3 = SPIA BL.PORTA/LOCKING DOOR S.LAMP/L.TEMOIN BLOCAGE PORTE/BL. BL. PUERTA
S4 = SPIA PIROLISI/PYROLITIC S.LAMP/L.TEMOIN PYROLYSE/PILOTO PIROLISI
SR = SPIA REGLDI ENERGIA/ENERGY REG./L.TEMOIN REG. D'ENERG./PILOTO REG. ENERGIA
ST = SPIA VENTILATORE/COOLING FAN S.LAMP/L.TEMOIN VENTILATEUR/PILOT VENTILADOR
T = TERMOSTATO/THERMOSTAT/THERMOSTAT/TERMOSTATO
TL = BAR-GRAPH TERMOSTATO/THERMOSTAT B.-G./THERMOSTAT B.-G./TERMOSTATO B.-G.
TL1 = BAR/GRAPH COMMUTATORE/SELECTOR B.-G./B.-G. COMMUTATEUR/B.-G. COMUTADOR
TP = TERMOSTATO PIROLITICO/THERMOSTAT PYROLITIC/THERMOSTAT PYROLYSE/TERMOSTATO PIROLITICO
TS = TERMOSTATO SICUREZZA/THERMAL CUT-OUT/THERMOLE SECURITE/TERMOLE SEGURIDAD
TT = TERM.VENTILATORE/COOLING FAN THERM./THERM.VENTILATEUR/TERM.VENTILADOR
VR = VENTILATORE RADIALE/FAN MOTOR/VENTILATEUR RADIAL/VENTILADOR DE COCCION
VT = VENTILATORE RAFFR./COOLING FAN/VENT. DE REFROIDISSEMENT/VENTILADOR DE RAFFR.
1 = RESISTENZA CIELO/TOP HEATING ELEM./RESIST. VOUTE/RESIST. PERIMETRAL SUPERIOR
2 = RESISTENZA GRILL/GRILL HEATING ELEMENT/RESISTANCE GRILL/RESIST. GRILL
3 = RESISTENZA SUOLA/BOTTOM HEATING ELEMENT/RESISTANCE SOLE/RESIST. INFERIOR
4 = RESISTENZA CIRCOLARE/CIRCULAR HEATING ELEM./RESIST. CIRCULAIRE/RESIST. TURBO
K1 = MESSA A TERRA GIRARROSTO/EARTING TERMINAL TURNSPIT/
FIL DE TERRE TOURNEBROCHE/HILO DE TIERRA RUSTEPOLLOS
K2 = H.T. PORTALAMPADA/H.T. LAMP HOLDER/F.T.LAMPE FOUR/H.T LUZ HORNO
K3 = H.T. RESIST.SUPERIORE/H.T. TOP ELEM./F.T. RESIST. SUPERIEUR/H.T. RESIST. SUPERIOR
K4 = H.T. RESIST.INFERIORE/H.T. BOTTOM ELEM./F.T. RESIST. INFERIEUR/H.T.RESIST. INFERIOR
K5 = H.T. MOT.RADIALE/H.T. FAN MOTOR/F.T. MOT. RADIAL/H.T.VENTILADOR DE COCCION
K6 = H.T. RESIST.CIRCOLARE/H.T. CIRCULAR ELEM./F.T. RESIST. DCULAIRE/H.T.RESIST. TURBO
K7 = H.T. TERMOST. A GAS/H.T. GAS THERMOST./F.T. THERMOST. GAZ/H.T. TERMOST. DE GAS
K8 = H.T. PROG./H.T. TIMER/F.T. PROG./H.T. PROG.
K9 = H.T. VENTILATORE/H.T. COOLING FAN/F.T. VENTILATEUR/H.T. VENTILADOR
KP = H.T. PIANO/H.T. HOB/F.T. PLAN/H.T. PLANO
KT = H.T. TELAIO O CRUSCOTTO/H.T. OUTER FRAME/F.T. CHASSIS/H.T. CARCASA

IT/EN/FR/SP
00 = NERO/BLACK/NOIR/NEGRO
11 = MARRONE/BROWN/MARRON/MARRON
22 = ROSSO/RED/ROUGE/ROJO
33 = ARANCIONE/ORANGE/ORANGE/ARANCIONE
44 = GIALLO/YELLO/JAUNE/AMARILLO
45 = GIALLO-VERDE/YELLO-GREEN/JAUNE-VERTE/AMARILLO VERDE
66 = BLU/BLUE/BLEU/AZUL
77 = VIOLA/VIOLET/VIOLET/VIOLA
88 = GRIGIO/GREY/GRIS/GRIGIO
99 = *BIANCO/WHITE/BLANC/BLANCO (*B-W-B-B)
90 = *B-NERO/W-BLACK/B-NOIR/B-NEGRO
91 = *B-MARRONE/W-BROWN/B-MARRON/B-MARRON
92 = *B-ROSSO/W-RED/B-ROUGE/B-ROJO
93 = *B-ARANCIONE/W-ORANGE/B-ORANGE/B-ARANCIONE
94 = *B-GIALLO/W-YELLO/B-JAUNE/B-AMARILLO
95 = *B-VERDE/W-GREEN/B-VERTE/B-VERDE
96 = *B-BLU/W-BLUE/B-BLEU/B-AZUL
97 = *B-VIOLA/W-VIOLET/B-VIOLET/B-VIOLA
98 = *B-GRIGIO/W-GREY/B-GRIS/B-GRIGIO